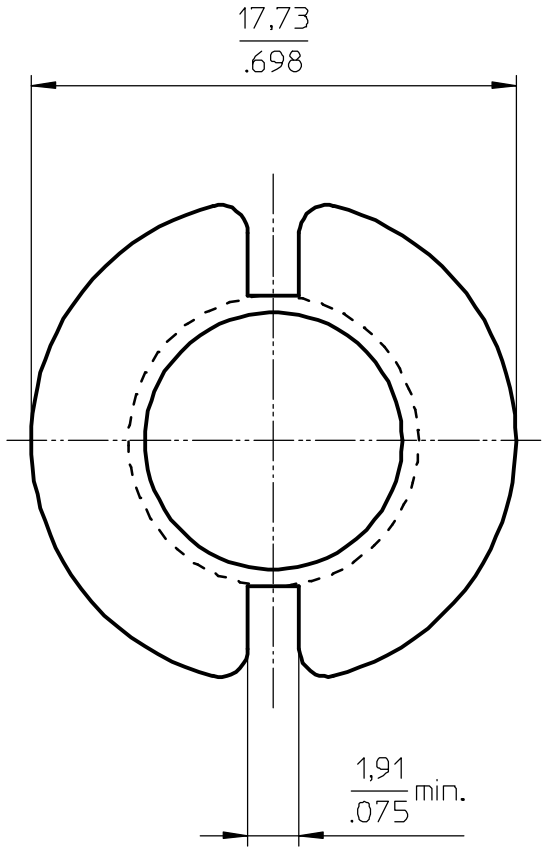

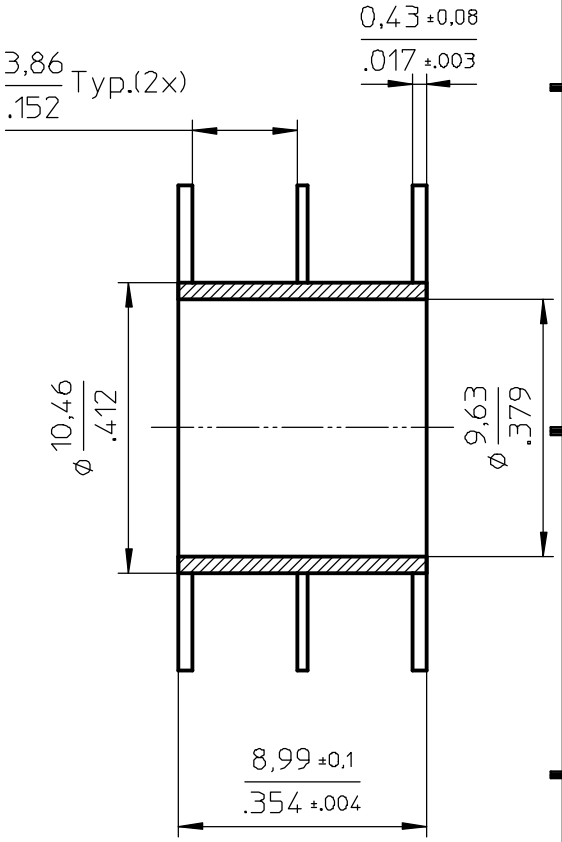

Coil former material: Celcon M270 NC (POM).
UL file number: E38860 - UL94HB.
max. operating temp: 130°C
mean length of turn: 1.7 inch
winding area: 0.021 sq inch

CP-P22/13-2S-A	4335 000 26111	01-06-01 02-11-04

NAME NAAM	Tjon	SUPERS. VERV.	1	SH BL.	SH BL. 112 – 001	A4
MPA		CHECK CONTR	DAT.	Property of Eigendom van	© FERROXCUBE 2002	